ROKAMAT
easy working

ROKAMAT Rucksack Vacuum Cleaner- 10000

Pos.	Order No.	Item	EAN No.
01	**10022**	**Dust exhausting cover cpl.**	4035834100226
01.01	10024	Clamp	4035834100240
01.02	10035	Screw 4x12	4035834100356
02	10038	Screw 4,5x16	4035834100387
03	10026	Rubber sealing	4035834100264
04	10034	Plastic nut (inside)	4035834100349
05	10025	Inner part	4035834100257
06	10031	Screw 5,5x16	4035834100318
07	**10028**	**Base part cpl.**	4035834100288
07.01	10051	Plastic nut (polished)	4035834100516
07.02	10029	Plastic foam	4035834100295
08	10037	Plastic connection	4035834100370
09	10057	Flange with elbow fitting	4035834100578
10	10019	Cable bend protection	4035834100196
11	10020	Cable	4035834100202
12	10040	Plug socket	4035834100400
13	10041	Screw 3,9x13	4035834100417
14	10042	Switch	4035834100424
15	10047	Disc	4035834100479
16	10039	Belts (2 pieces)	4035834100394
17	10046	Belt clip	4035834100462
18	10048	Cable (black)	4035834100486
19	10049	Cable (red)	4035834100493
20	10032	Condenser	4035834100325
21	10030	Motor 230V	4035834100301
22	10045	Carbon brushes (pair)	4035834100455
23	10012	Screw set	4035834100127
24	10010	Motor cap	4035834100103
25	10003	Lamellar filter	4035834100035
26	10011	Covering for lamellar filter	4035834100110
27	10014	Rubber washer	4035834100141
28	10013	Knurl nut	4035834100134
29	**10058**	**Suction hose 1,3m cpl.**	4035834100585
29.01	10017	Socket pipe	4035834100172

Änderungen vorbehalten
Subject to technical changes

ROKAMAT
easy working

ROKAMAT Rucksacksauger - 10000
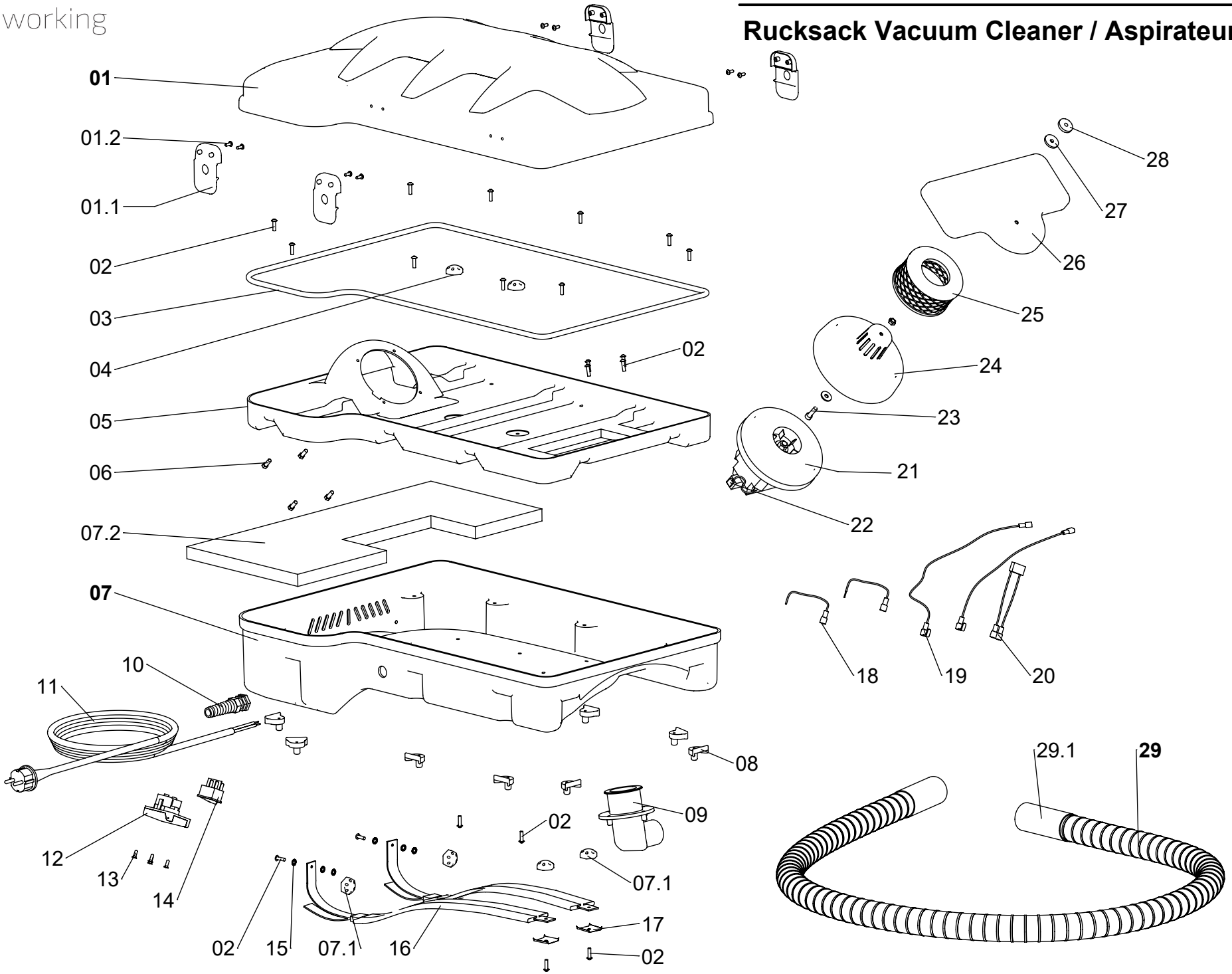
Rucksack Vacuum Cleaner / Aspirateur Sac à Dos